Dream On Me Inc.
1532 S Washington Ave
Piscataway Township
NJ 08854
Email: info@dreamonme.com
www.dreamonme.com

STYLE NO: 683
PORTABLE CRIB
MFG CODE :BLY
MFG DATE: APR 2013
MADE IN CHINA

CAUTION:ANY MATTRESS USED IN THIS CRIB MUST BE AT LEAST 23-5/8" (600MM) BY 37-3/4" (959MM) WITH A THICKNESS NOT EXCEEDING 2" (51MM) . THE CRIB CONFORMS TO APPLICABLE REGULATIONS PROMULGATED BY THE CONSUMER PRODUCTS SAFETY COMMISSION.

CONSUMER PRODUCT SAFETY COMMISSION
CERTIFIED
AN INDEPENDENT TESTING LABORATORY VALIDATES THE MANUFACTURER'S CERTIFICATION OF THIS CRIB TO ASTM F-406, CPSC 16 CFR 1220

STEP 1
Assemble latch (i & j) to the headboard (A & B) by using 5/8" screw (k).Then assemble plastic block(n) to the headboard (A & B) by using 3/4" screw (m).Tighten all by phillips-head screwdriver. Make sure that the latch on the bottom of each headboard (A & B) are locked.

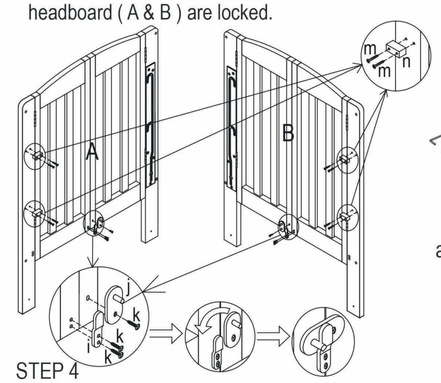

STEP 2
Connect rail (C) and stabilizer bar (D)to the headboard (A & B) by screws (a) and nuts (b) , wood dowel (d) , washer (g) , washer (h) . DO NOT fully tighten the bolts.

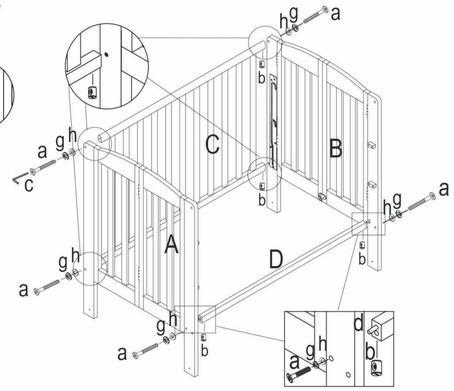

STEP 3
Slot in the metal pin into the notch of left and right headboard side corner post.then move up and down to adjust the mattress base into medium or highest level.

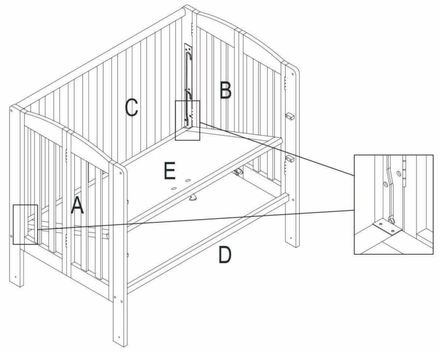

STEP 4
Connect rail (C) to the headboard (A & B) by screws (a) , nuts (b), washer (g) , washer (h) .
THEN FULLY tighten all the bolts .

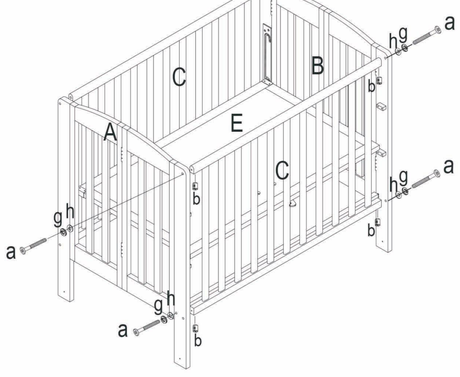

STEP 5
Assemble castors (e&f) to the leg bottoms on the leg on headboard (A&B). 2 castors (e) with brake are in the front. THEN add the mattress(F).

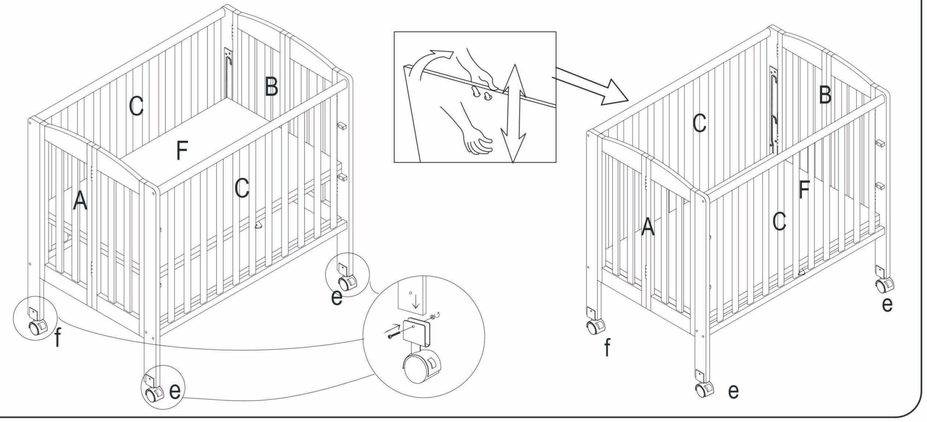

STEP 6
Select the desire level,and use both hand to lift up the mattress base,then adjust the level to your require height of the 3 level.

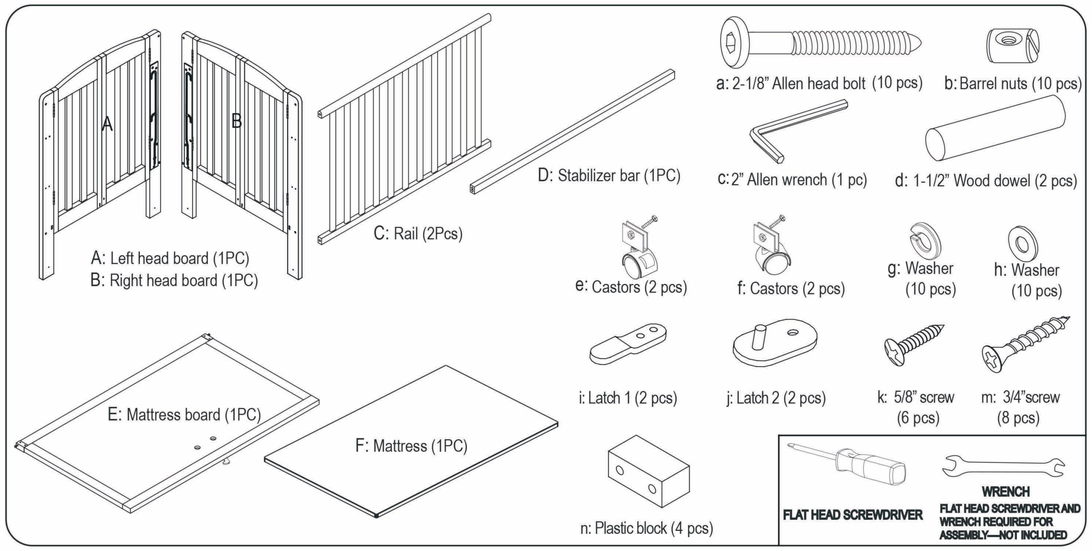

⚠ WARNING

****Keep instructions for future use****

- This product meets or exceeds specifications as issued by the consumer product safety for non-full size baby cribs.
- Caution:Before using this unit recheck all screws to be sure they are tightened securely. a periodic check should be made of all screws&nuts to be sure they remain tight.

⚠ WARNING

****Infants can suffocate****

- In gas between a mattress too small or too thick and product sides.
- On soft bedding never add a mattress, pillow,comforter,or padding.
- Use up and middle level mattress support only for a new born baby and not more than the first 3 months.

⚠ WARNING

- Failure to follow these warnings and the instructions could result in serious injury or death.
- Do not use plastic shipping bag or other plastic film as mattress covers not sold and intended for that purpose, they can cause suffocation.
- Never use a watter mattress with this product, if refinishing,use a non-toxic finish specified for children's products.
- Strings can cause strangulation! Never place items with a string around a child's neck,such as hood strings or pacifier cords.Never suspend strings over product or attach strings to toys.
- Discontinue use of the product when child is able to climb out or reaches the height of 35in.(890mm).
- When child is able to pull to standing position,set mattress/base to lowest adjustment position and remove bumper pads, large toys ,and other objects that could serve as steps for climbing out.
- Never place product near window where cords from blinds or drapes can strangle a child.
- Always provide the supervision for continued safety of your child.
- To reduce the risk of SIDS, pediatricians recommend healthy infants be placed on their back to sleep, unless otherwise advised by your physician.
- Never use this product if there are any loose or missing fasteners, loose joints,broken parts, or torn mesh/fabric. check before assembly and periodically during use. Contact DREAM ON ME. for replacement parts and instructional literature if needed.Make sure the latches are secure.
- Never substitute parts, the product including side rails, must be fully erected prior to use.
- Always provide the supervision necessary for the continued safty of your child. When used for playing, never leave child unattached.

MADE IN CHINA

Follow bellow to fold the crib:
1.take out the mattress (F)
2.take out the mattress board (E)
3.unlock the latch on the headboard
4.fold the crib

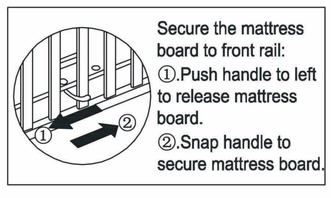

Secure the mattress board to front rail:
①.Push handle to left to release mattress board.
②.Snap handle to secure mattress board.

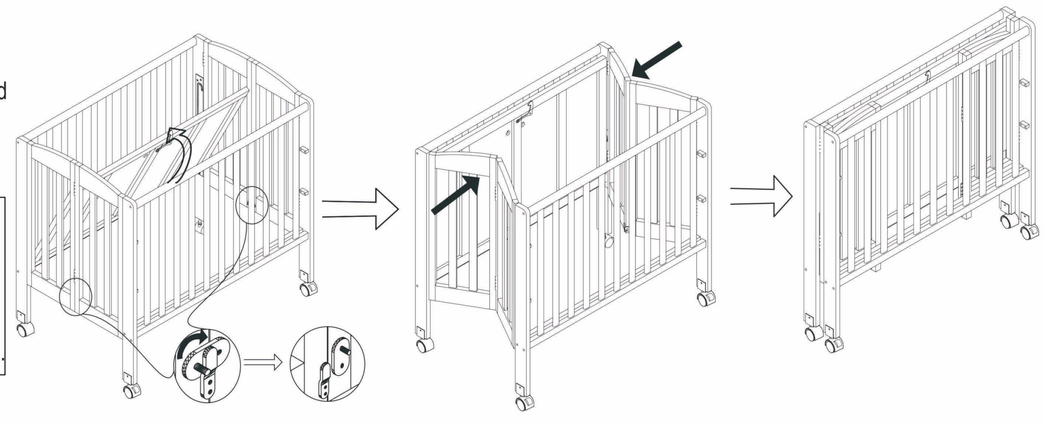

LIMITED WARRANTY

- Dream on Me warrants its product to be free from defects in material and workmanship and agrees to remedy any such defect.
- This warranty covers 30 days from the date of original purchase.
- This warranty is valid only upon presentation of proof of purchase. This is solely limited to the repair or replacement of defective furniture components and no assembly labor is included.
- This warranty does not apply to any product which has been improperly assembled, subjected to misuse or abuse or which has been altered or repaired in any way.
- This warranty gives you specific legal rights and you may also have other rights which vary from State to State.

WARNING: Should this product become damaged, and/or components are broken or missing, DO NOT USE

WARNING:Plastic Block should be removed once the mattress support is used in the lowest level. Plastic Block should be kept in a secure places for future usages .

Scan the QR code to register your product
https://dreamonme.com/customercare/registration/

1532, S. Washington Avenue
Piscataway, NJ 08854
E-mail: info@dreamonme.com

www.dreamonme.com

Follow us on
@dreamonmeinc **@dreamonmeinc**
to get your nursery featured on our social media.

Enter our monthly giveaway!
Simply scan the QRcode to register.

Chat with us!
For any questions or concerns or feedback.

DOM FAMILY

Dream On Me · slumber baby · sweetpea baby · évolur evolving with your baby