Read all instructions before assembly and use.
KEEP INSTRUCTIONS FOR FUTURE USE.

⚠ ADULT ASSEMBLY REQUIRED

Due to the presence of small parts during assembly,keep out of reach of children until assembly is complete.

4 IN 1 MINI CRIB

Comes with a mattress.

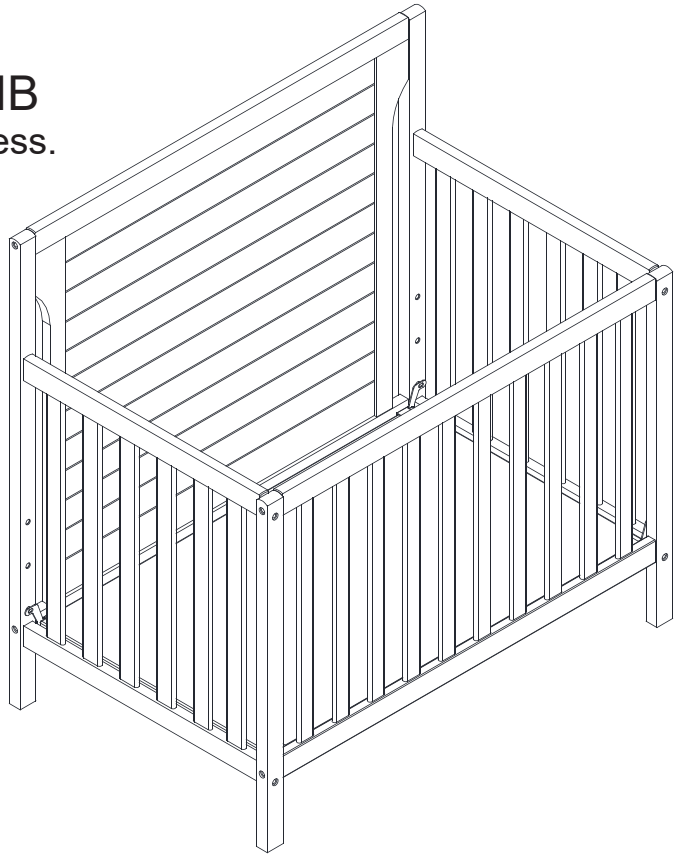

THIS PRODUCT IS NOT INTENDED FOR INSTITUTIONAL OR COMMERCIAL USE.

Consumer Care:

www.dreamonme.com
1532 S WASHINGTON AVE
PISCATAWAY TWP NJ 08854
OFFICE: 732-752-7220
CUSTOMER SERVICE: 732-366-1788

style #: 637

MFG date: Aug,2020

When contacting Dream On Me you will need to reference the above numbers .They can also be found on the label on the Crib End bottom rail.

To register your product for important safety alerts and updates to your product please visit **www.dreamonme.com** and click on Product Registration.

⚠ CAUTION:

ANY MATTRESS USED IN THIS CRIB SHALL BE AT LEAST 23 3/4 BY 37 3/4 IN. WITH A THICKNESS NOT EXCEEDING 2 IN.

⚠ WARNING:

- Infants can suffocate on soft bedding.Never add a pillow or comforter.Never place additional padding under an infant.
- Failure to follow these warnings and the assembly instructions could result in serious injury or death. DO NOT use this crib if you cannot exactly follow the accompanying instructions.
- To reduce the risk of SIDS,pediatricians recommend healthy infants be placed on their backs to sleep, unless otherwise advised by your physician.
- Strangulation Hazard:STRINGS CAN CAUSE STRANGULATION! Do not place items with a string around a child's neck, such as hood strings or pacifier cords. Do not suspend strings over a crib or attach strings to toys. Strangulation Hazard: To help prevent strangulation tighten all fasteners.A child can trap parts of the body or clothing on loose fasteners.
- Strangulation Hazard: Do not place crib near window or patio door where cords from blinds or drapes may strangle a child.
- Fall Hazard: When child is able to pull to a standing position, set mattress to lowest position and remove bumper pads, large toys and other objects that could serve as steps for climbing out.This crib has an adjustable mattress support For the convenience of the parent when the baby is very small, the mattress support may be used in the highest position.Important: with the mattress support and mattress in the highest position, be absolutely sure that the top of the front crib side is at least 3 inches higher then the top surface of the mattress.If it is not, lower the mattress support and the mattress to the next highest position.
- Fall Hazard: Stop using crib when child begins to climb out or reaches a height of 35in(89), whichever occurs first. The child should be placed in a youth or regular bed.
- Check this product for damaged hardware, loose joints,loose bolts or other fasteners,missing parts, or sharp edges before and after assembly and frequently during use.Securely tighten loose bolts and other fasteners. Do not use crib if any parts are missing,damaged or broken.Contact Dream On Me for replacement parts and instructional literature if needed.Do not substitute parts.
- Follow warnings on all products in a crib.
- If refinishing,use a non-toxic finish specified for children's products.
- Never use plastic shipping bags or other plastic film as mattress covers because they can cause suffocation.
- Infants can suffocate in gaps between crib sides and a mattress that is too small.
- Ensure a safe environment for the child by checking regularly, before placing the child in the crib,that every component is properly and securely in place.
- To avoid head injury, do not allow any child to play underneath the crib.
- Never add an accessory such as a bassinet or changing table that extends over the sleeping area.
- In Canada Only-Use a crib mattress that is no thicker than 15 cm and is of such a size that,when it is pushed firmly against any side of the crib, it does not leave a gap of more than 3 cm between the mattress and any part of the sides of the crib. Do not use this crib for a child who can climb out of it or who is taller than 90 cm.

NOTES ON ASSEMBLY:

- During the assembly process whenever using screws or bolts, check each by placing the screw/bolt on the diagram of the item which is drawn actual size and design.Be sure to use the proper size and shape specified in the instructions.
- To assemble this unit you may be required to place the unit on it's side and face. It is strongly recommended that assembly is done on a soft, non-abrasive surface to avoid damaging the finish.

NOTES ON USE:

Keep children and others safe by following these simple rules:

- **Do not** allow any child to play on furniture.
- **Do not** allow climbing on any piece of furniture.
- **Do not** allow hanging from any piece of furniture.
- Always monitor your child's activity when in the nursery.

NOTES ON CARE AND MAINTENANCE:

- **Do not** scratch or chip the finish.
- Inspect the product periodically, contact Dream On Me for replacement parts or questions.
- Do not store the product or any parts in extreme temperatures and conditions such as a hot attic or a damp, cold basement. These extremes can cause a loss of structural integrity.
- To preserve the luster of the high quality finish on your product, it is recommended to place a doily or felt pad under any items you place on the finish.
- Clean with a damp cloth, then a dry cloth to preserve the original luster and beauty of this fine finish.
- **Do not** use abrasive chemicals.
- **Do not** spray cleaners directly onto furniture.
- Lift slightly when moving on carpeting to prevent leg breakage.
- Use of a vaporizer near furniture will cause wood to swell and finish to peel.
- The Product,including side rails,must be fully erected prior to use.
- Child can become entrapped and die when improvised netting or covers are placed on top of a play yard.Never add such items to confine child in play yard.
- Always provide the supervision necessary for the continued safety of your child.When used for playing,never leave child unattended.
- Never use a water mattress with this product.

⚠ MISE EN GARDE !

- Le non-respect des avertissements et des instructions d'assemblage peut conduire à des blessures graves ou à la mort.
- Lisez toutes les instructions avant l'assemblage du lit. Gardez le manuel pour une utilisation future.
- Après l'assemblage du lit, vérifiez que tous les écrous, les boulons et les vis sont serrés à fond. Vous devez ensuite inspecter le lit régulièrement.
- Ne pas utiliser ce produit s'il y a des fixations desserrées ou manquantes, des joints lâches, des pièces endommagées ou si le tissu présente des déchirures. Inspectez le produit avant l'assemblage et pendant l'usage. Pour des pièces de remplacement et instructions d'assemblage, contactez DREAM ON ME.
- Ne pas substituer des pièces. Ce produit, y compris les rebords, doit être entièrement assemblé avant de l'utilisation.
- Ne pas utiliser le lit si l'enfant est capable d'en sortir ou mesure plus de 900 mm (35 po).
- Ne placez pas le lit auprès d'une fenêtre là o= les cordes des stores ou draperies pourront étrangler un bébé.
- Quand l'enfant est capable de se soulever pour se tenir dans une posture verticale, réglez le matelas à la position la plus basse et enlevez des bordures de protections, des grands jouets et tout autre objet qui pourra faciliter au bébé de grimper et sortir du lit. Des fixations lâches peuvent causer le piégeage d'une partie du corps ou des vêtements de l'enfant.
- Ne jamais utiliser les sacs d'expédition en plastique ou tout autre film en plastique, pour couvrir le matelas, s'ils ne sont pas destinés à cet usage, car ils peuvent causer la suffocation.
- ATTENTION : pour éviter les espaces dangereux, les matelas utilisés avec ce lit doivent être de taille standard et mesurer au moins 600 mm (23 3/4 pouces) par 960 mm (37 3/4 pouces) pour une épaisseur d'au plus 50 mm (2 pouces). Les dimensions du matelas doivent être mesurées d'une couture à l'autre ou d'un bord à l'autre.
- Ne pas utiliser un matelas à eau avec ce lit.
- Des cordes peuvent causer la strangulation ! Ne jamais placer des objets attachés par une corde autour du cou de votre bébé, voire celle d'un capuchon ou d'une sucette. Ne pas suspendre des cordes en dessus du lit, ni attacher des jouets par des cordes.
- Les jeunes enfants peuvent glisser et suffoquer dans des espaces vides créés entre les côtés latéraux du lit et le matelas, si ce dernier (le matelas) n'est pas assez grand ou s'il est trop épais. Sur un matelas mou ne jamais ajouter des matelas, coussins, ou de rembourrage additionnel.
- Pour réduire les risques du syndrome de la mort subite du nourrisson, les médecins pédiatres vous recommandent de placer sur le dos le bébé pendant le sommeil, excepté dans les cas où votre médecin émet un avis différent.
- Si vous voulez retaper la couche de fini, utilisez un fini non toxique recommandé pour des produits destinés aux enfants.
- Un nourrisson peut s'asphyxier sur un matelas trop mou.
- Ne jamais ajouter de coussin ou une couette.
- Ne jamais ajouter de rembourrage additionnel.
- Pour prévenir la strangulation, assurez-vous que les boutons de verrouillage sont enclenchés.
- Des fixations lâches peuvent causer le piégeage d'une partie du corps ou des vêtements de l'enfant.
- Suivez toutes les mises en garde des produits qui se trouvent dans le berceau.

FABRIQUÉ EN CHINE

PARTS: MAKE SURE THAT ALL PRE-ASSEMBLED PARTS ARE TIGHT.

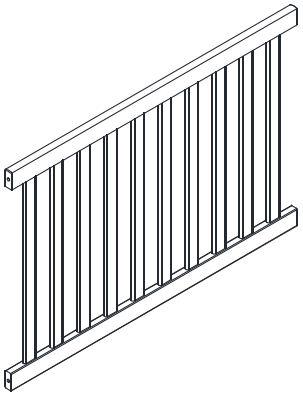

A. Front Rail (1PC)

B. Left Front Leg (1PC)

C. Right Front Leg (1PC)

D. Left Back Rail Leg (1PC)

E Right Back Rail Leg (1PC)

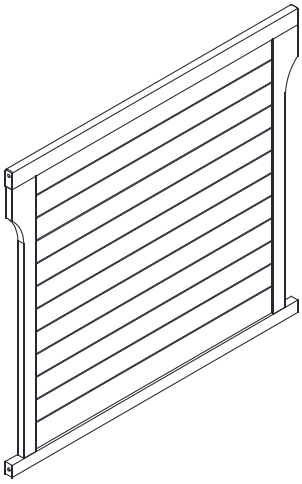

F. Back Rail (1PC)

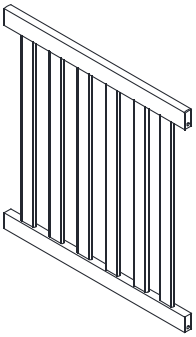

G. Left Crib End Bottom(1PC)

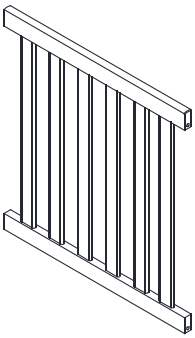

H. Right Crib End Bottom(1PC)

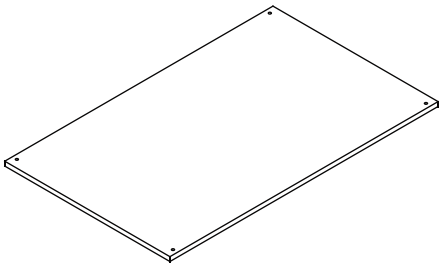

J. Wooden Mattress Base (1PC)

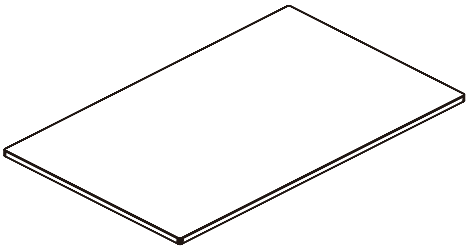

K. Mattress (1PC)

POUCH ATTACHED TO MATTRESS SUPPORT
-KEEP INSTRUCTIONS IN THIS POUCH AFTER ASSEMBLY.
WARNINGS RELATED TO THE SAFE USE OF THIS CRIB ARE PRINTED ON THE POUCH.

PARTS:

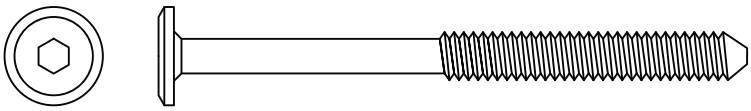

a. M6 x 75 mm Allen head Bolt (8pcs)

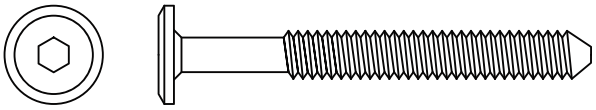

b. M6 x 55 mm Allen head Bolt (8pcs)

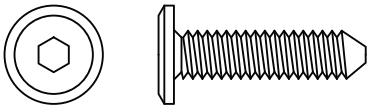

c. M6 x25 mm Allen head Bolt (4pcs)

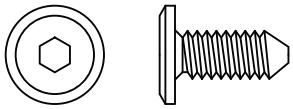

d. M6 x15 mm Allen head Bolt (4pcs)

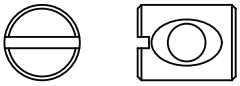

e. BARREL NUT x 16

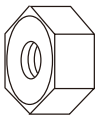

f. Nut x 4 pcs

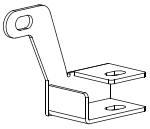

r. Left support brackets (2PCS)

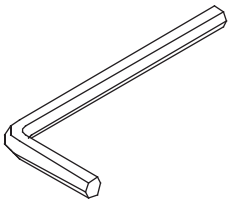

g. M4 ALLEN WRENCH SUPPLIED

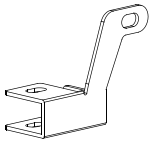

s. Right support brackets (2PCS)

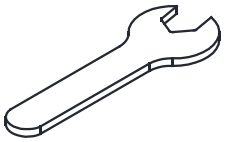

j.Wrench(1pc)

SECTION 1: Crib Assembly
STEP 1

Parts and tools required to complete step.

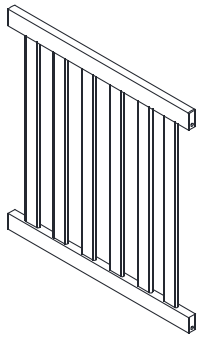

G. Left Crib End (1PC)

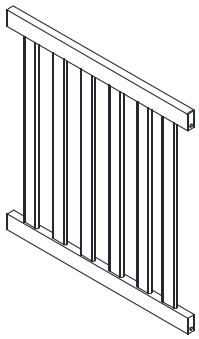

H. Right Crib End (1PC)

B. Left Front Leg (1PC)

C. Right Front Leg (1PC)

D. Left Back Rail Leg (1PC)

E. Right Back Rail Leg (1PC)

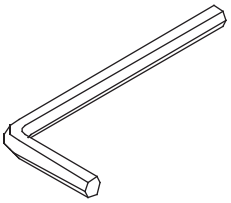

M4 ALLEN WRENCH SUPPLIED

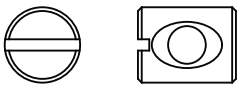

e. BARREL NUT x 8

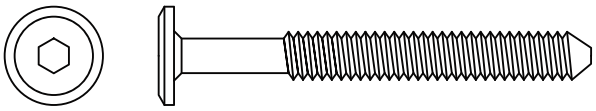

b. M6 x 55 mm BOLT x 8

Attach left back leg (D) and left front leg (B) to left crib end (G) using M6X55mm bolts (b) and barrel nut (e)
Tighten With the M4 Allen Wrench.
Use the Flat HEAD Screwdriver to hold the Barrel Nut in the proper alignment.
Repeat on the Right Crib.

Fixez la jambe arrière gauche (D) et la jambe gauche avant (B) sur la plancheà gauche (G) à l'aide des boulons (b) .
Assemblez la bonne planche de tête utilisent de la même manière.

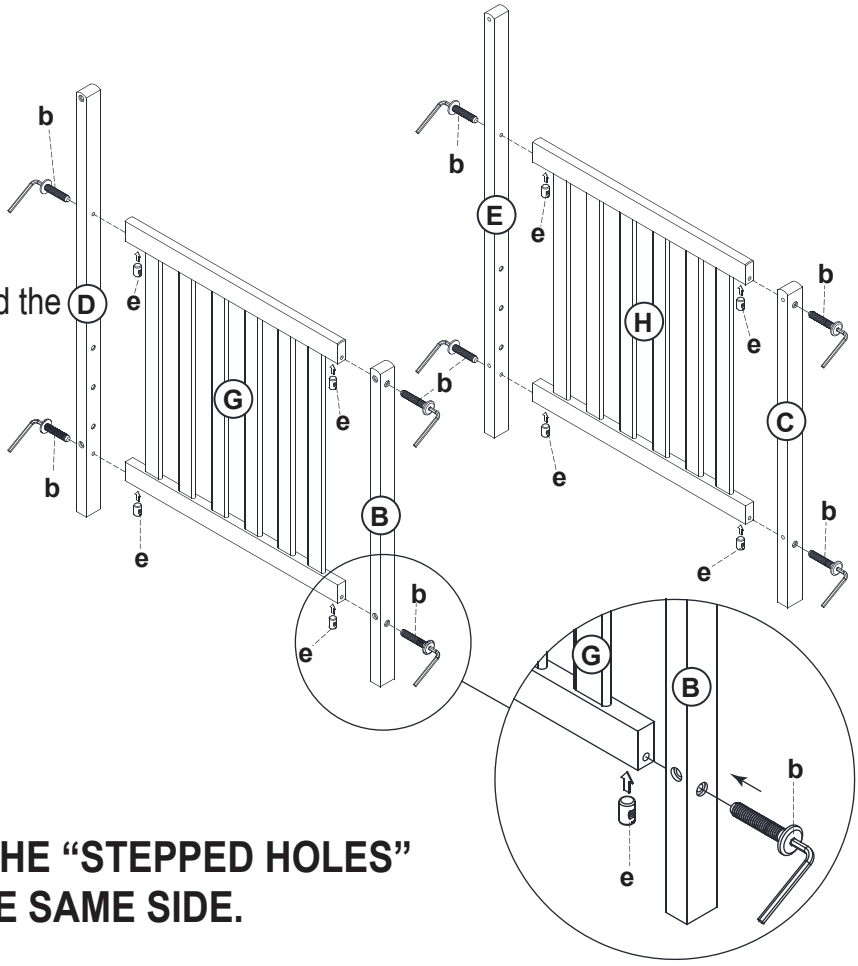

NOTE: AFTER ASSEMBLY, THE "STEPPED HOLES" IN BOTH POSTS ARE ON THE SAME SIDE.

SECTION 1: Crib Assembly
STEP 2

Parts and tools required to complete step.

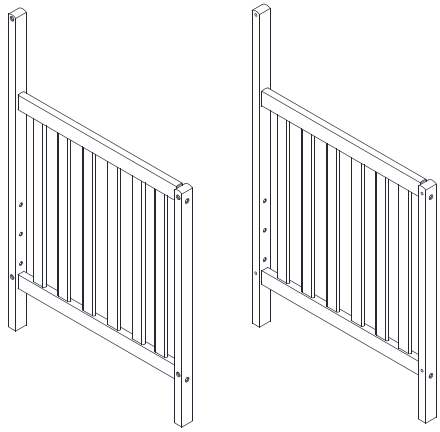

From Step 1

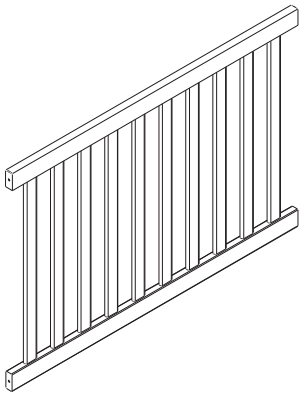

A. Front Rail (1PC)

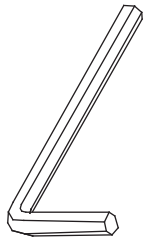

M4 ALLEN WRENCH SUPPLIED

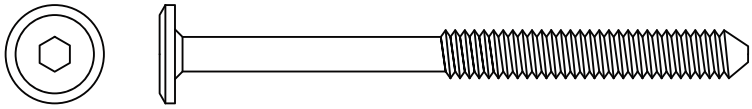

a. M6 x 75 mm BOLT x 4

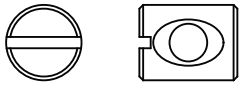

e. BARREL NUT x 4

Attach The Front Rail (A) to the assemblies from step 1, using Bolts (a),Barrel Nuts (e) . Tighten with the Allen Wrench (g) . Use the Flat Head Screwdriver to hold the Barrel Nut in the proper alignment.

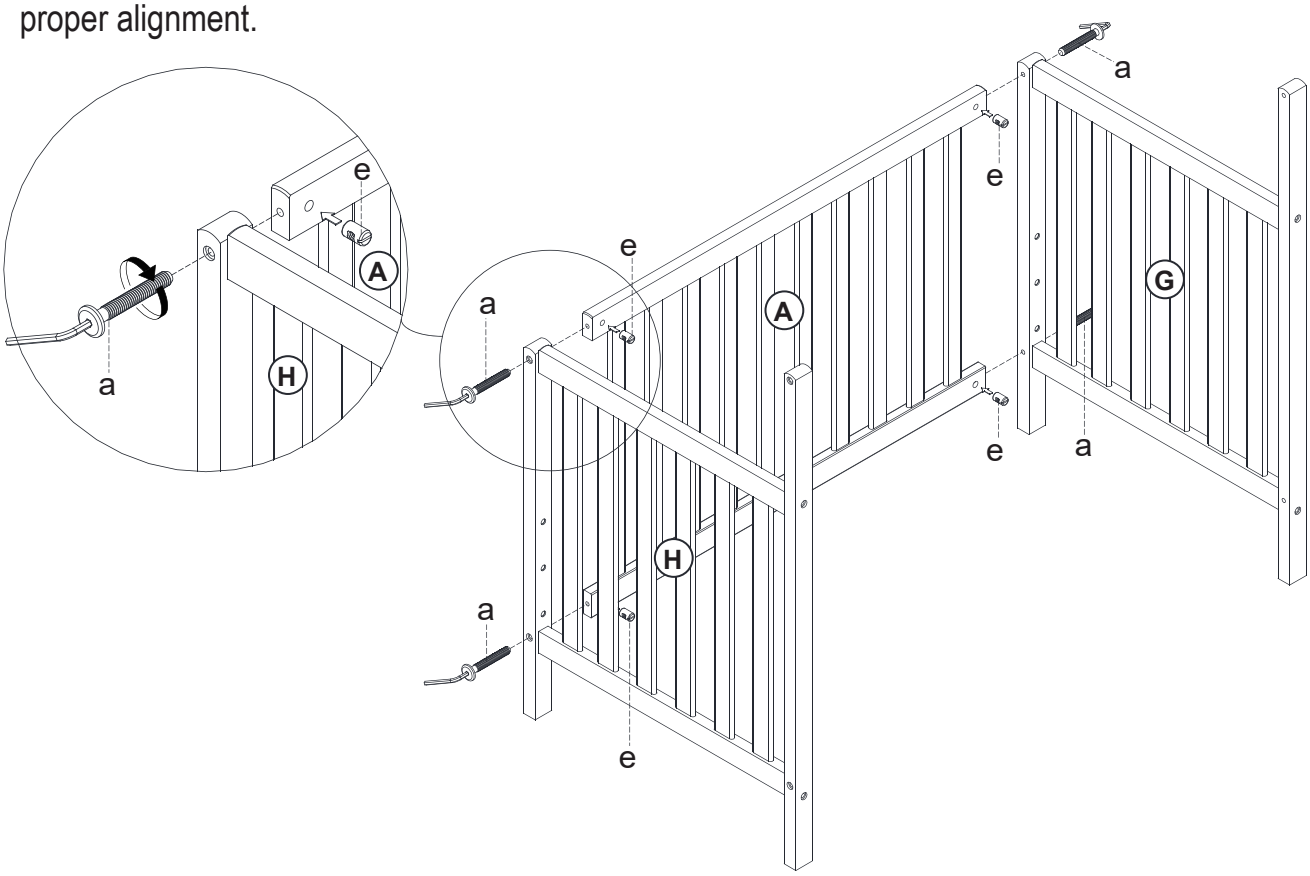

Fixez le rail arrière (A) aux ensembles à partir de l'étape 1, en utilisant les boulons (a), les écrous de barille (e). Serrez avec la clé Allen (g). Utilisez le tournevis à tête plate pour maintenir l'écrou à barillet dans le alignement correct.

SECTION 1: Crib Assembly
STEP3

Parts and tools required to complete step.

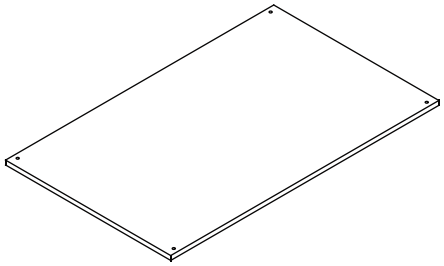

J. Wooden Mattress Base (1PC)

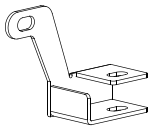

r. Left support brackets (2PCS)

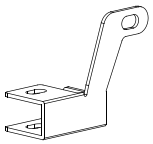

s. Right support brackets (2PCS)

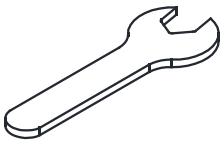

j.Wrench

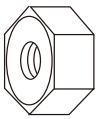

f. Nut x 4 pcs

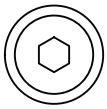

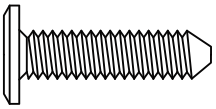

c. M6 x25 mm Allen head Bolt (4pcs)

Attach the Left support brackets(r) and Right support brackets (s) to the Wooden mattress base(J) by using allen head bolts(c) and Nut(f) .

Fixez les supports gauche (r) et droit (s) à la base du matelas en bois (J) à l'aide des vis à tête à six pans creux (c) et de l'écrou (f).

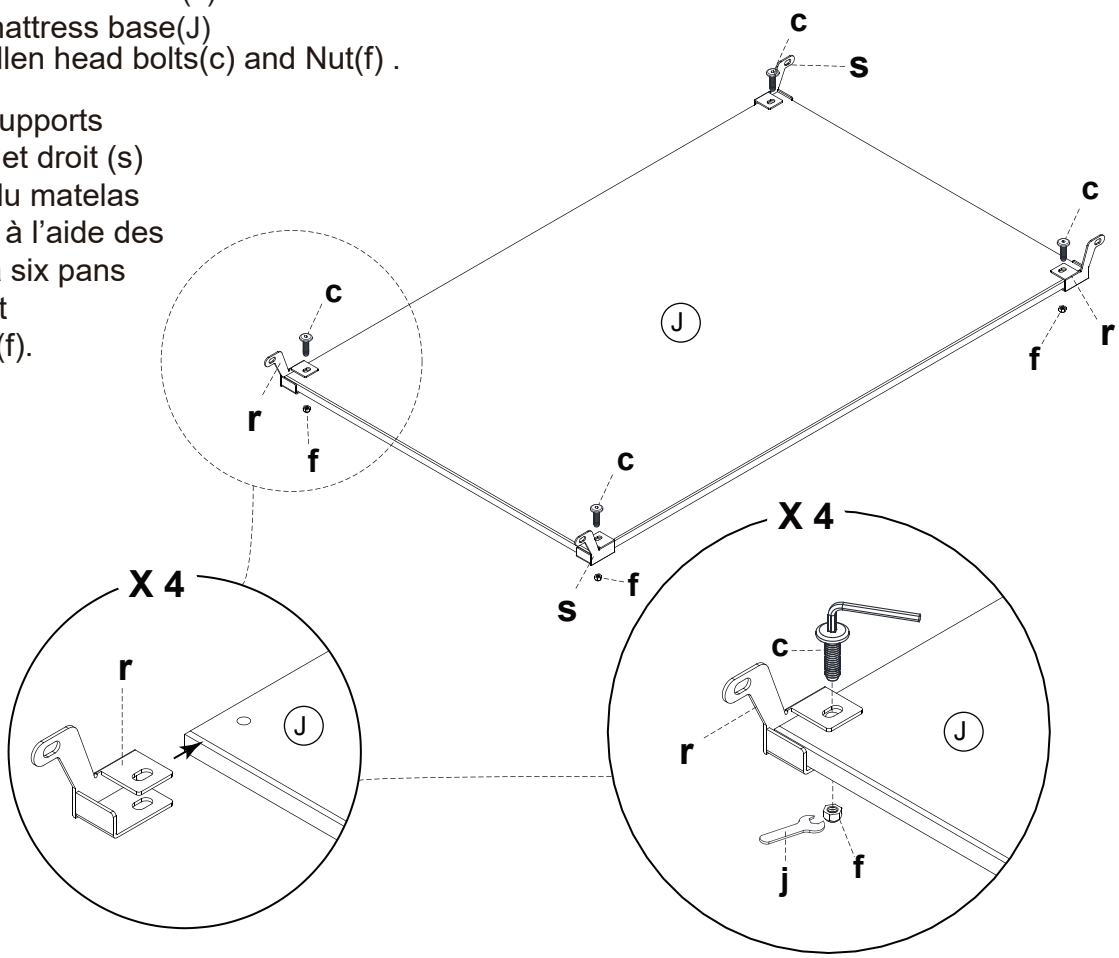

SECTION 1: Crib Assembly
STEP 4

Parts and tools required to complete step.

From Step 2

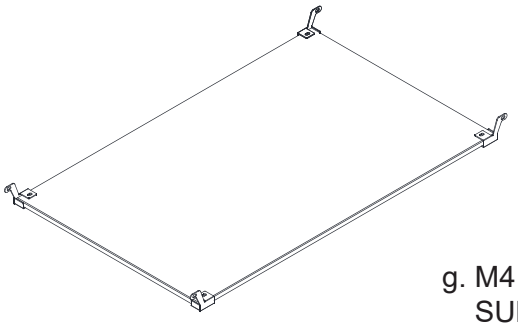

From Step 3

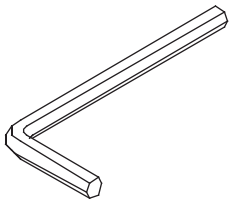

g. M4 ALLEN WRENCH SUPPLIED

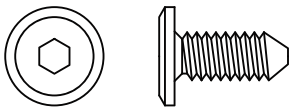

d. M6 x15 mm Allen head Bolt (4pcs)

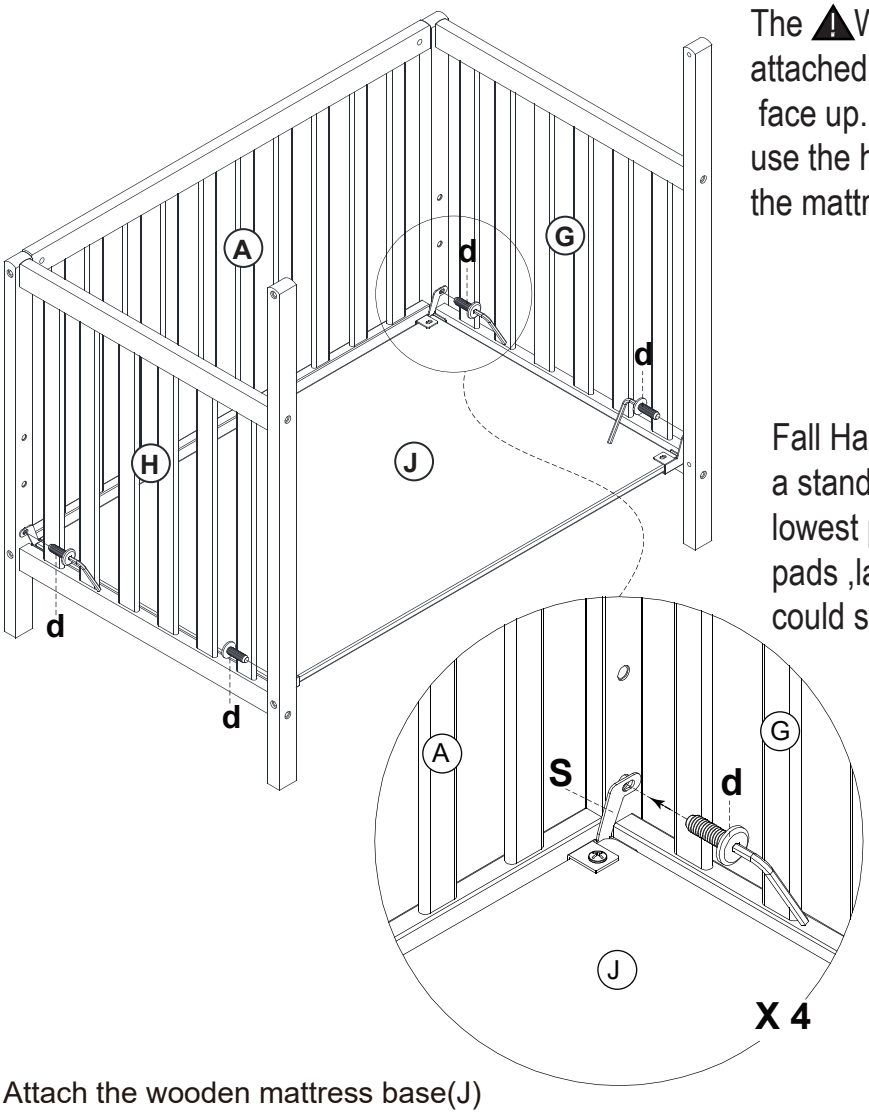

The ⚠Warnings printed on the pouch attached to the mattress support must face up. This crib has adjustment positions, use the highest only for new borns, move the mattress down as the child grows.

⚠ WARNING:

Fall Hazard: When child is able to pull to a standing position,set mattress to lowest position and remove bumper pads ,large toys and other objects that could serve as steps for climbing out.

Attach the wooden mattress base(J) to the left back leg(E) and right back leg(G) and Left Front Leg (F) and Right Front Leg (H) by using allen head bolts(e).

SECTION 1: Crib Assembly
STEP 5

Parts and tools required to complete step.

g. M4 ALLEN WRENCH SUPPLIED

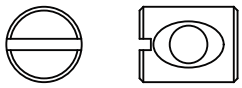

e. BARREL NUT x 4

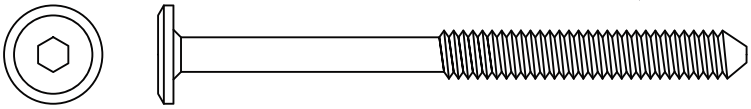

a. M6 x 75 mm Allen head Bolt (4pcs)

From Step 4

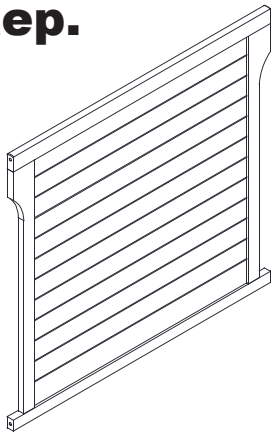

F. Back Rail (1PC)

Attach The Back rail (F) and left crib ends
and right crib end using 75mm allen head bolts (a),
barrel nuts(e) and allen wrench (g) .

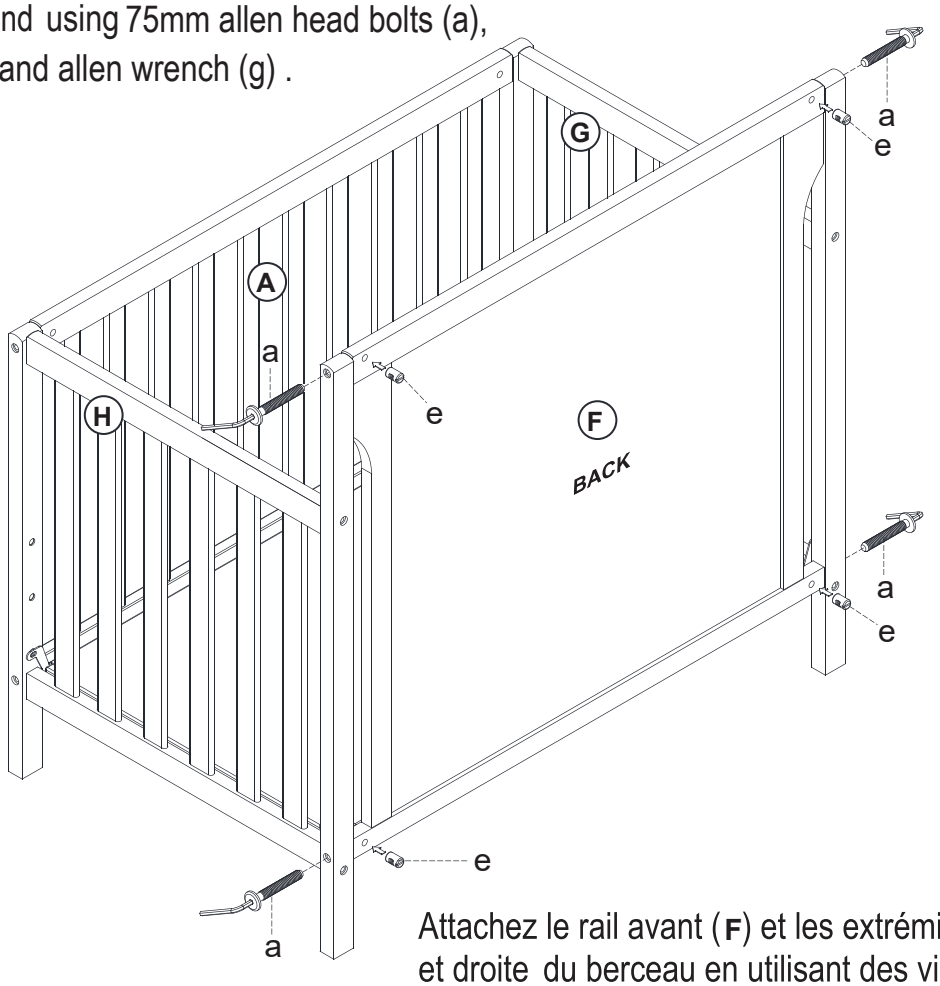

Attachez le rail avant (**F**) et les extrémités gauche
et droite du berceau en utilisant des vis à six pans
3” (a), des écrous manchon (e) et la clé Allen (g).

Model shown is example only.
Styles may vary .

Le modèle présenté dans ce guide n'est qu'un exemple.
Les modèles peuvent varier.

SECTION 1: Crib Assembly
STEP6

Parts and tools required to complete step.

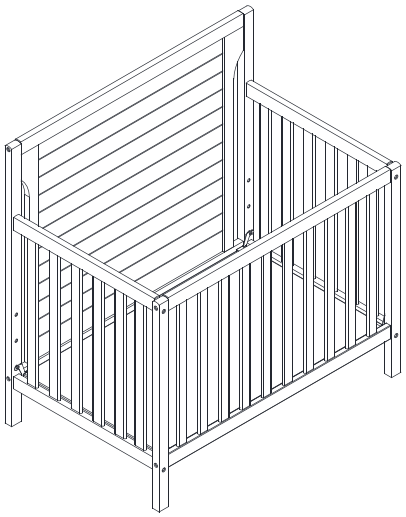

From Step 5

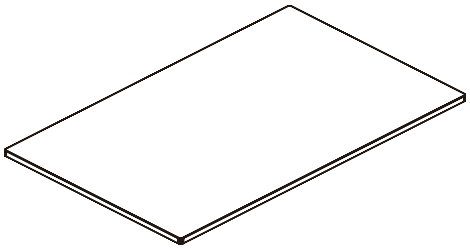

K. Mattress (1PC)

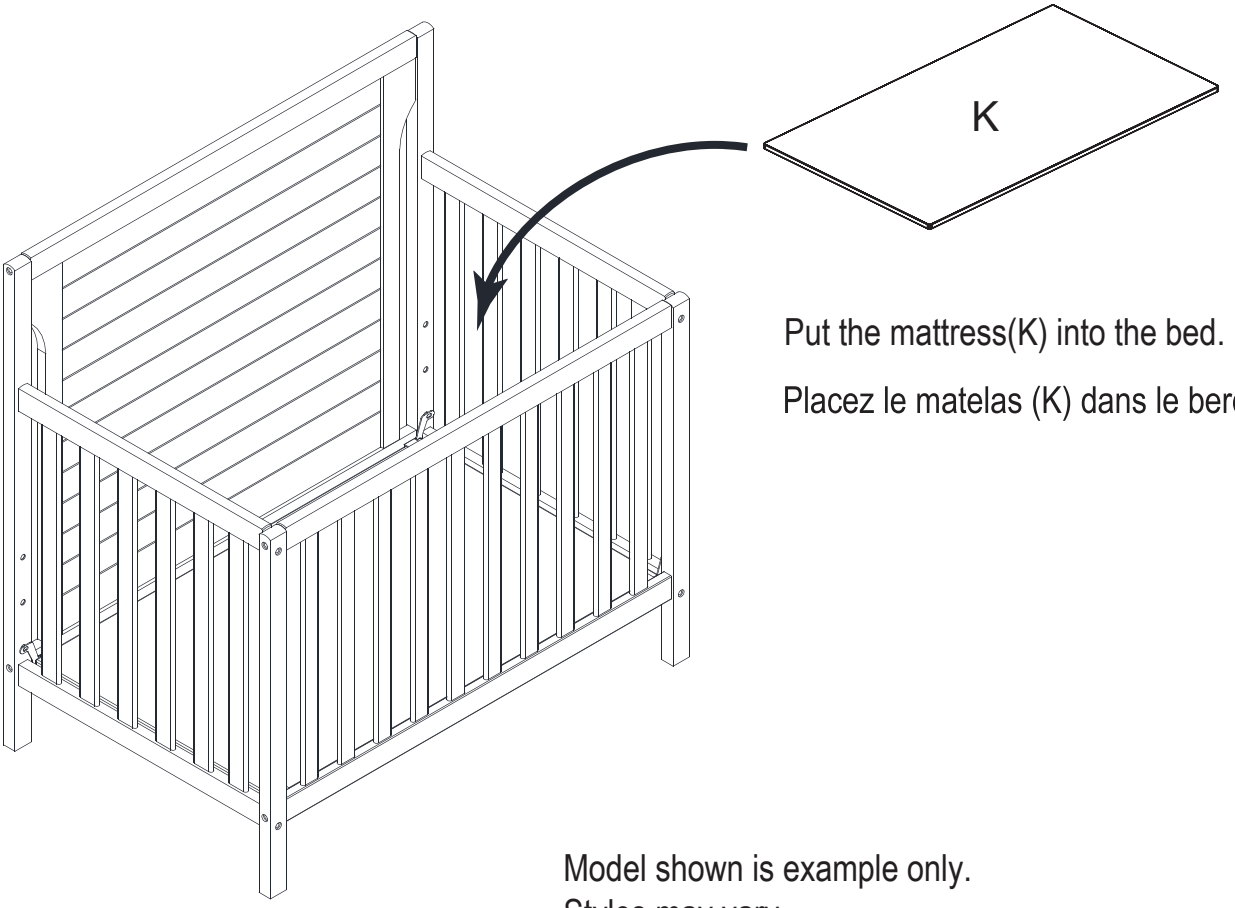

Put the mattress(K) into the bed.

Placez le matelas (K) dans le berceau.

Model shown is example only.
Styles may vary .

Le modèle présenté dans ce guide n'est qu'un exemple.
Les modèles peuvent varier.

SECTION 2: Day Bed Conversion
STEP 1

Parts and tools required to complete step.

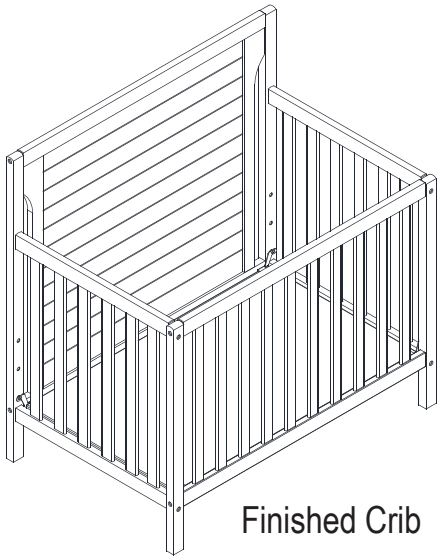

Finished Crib

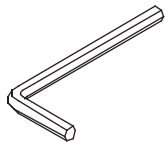

g Allen wrench

Remove the Front Rail installed in step 5 of section 1 Crib Assembly.

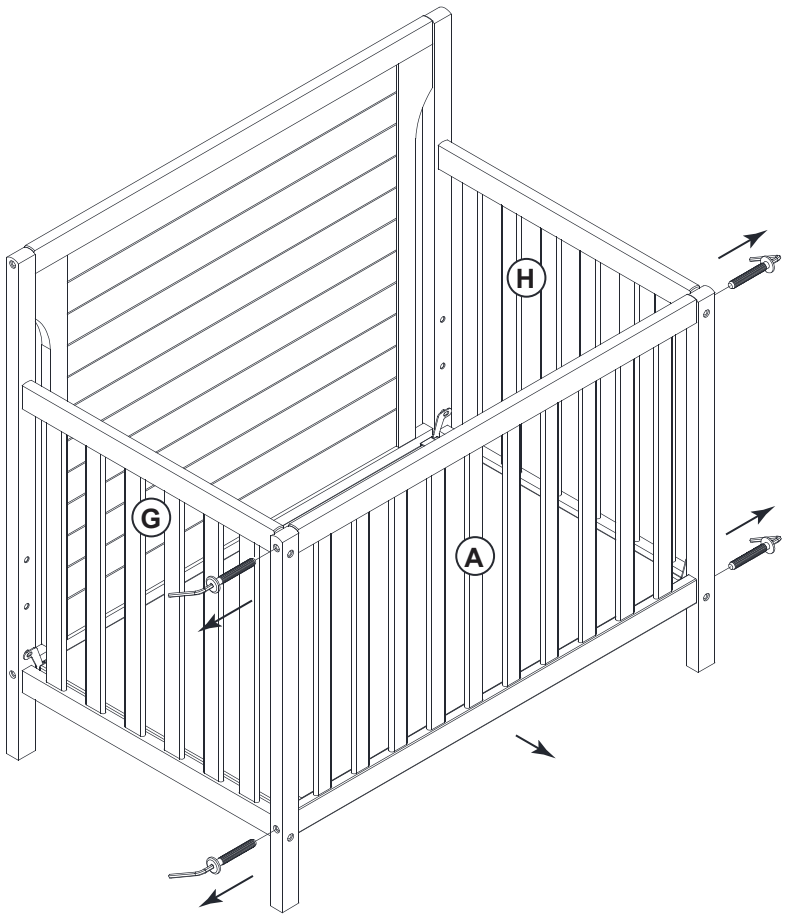

SECTION 2: Day Bed Conversion
STEP 2

The mattress support must be in the lowest positions.
Store all hardware safely.

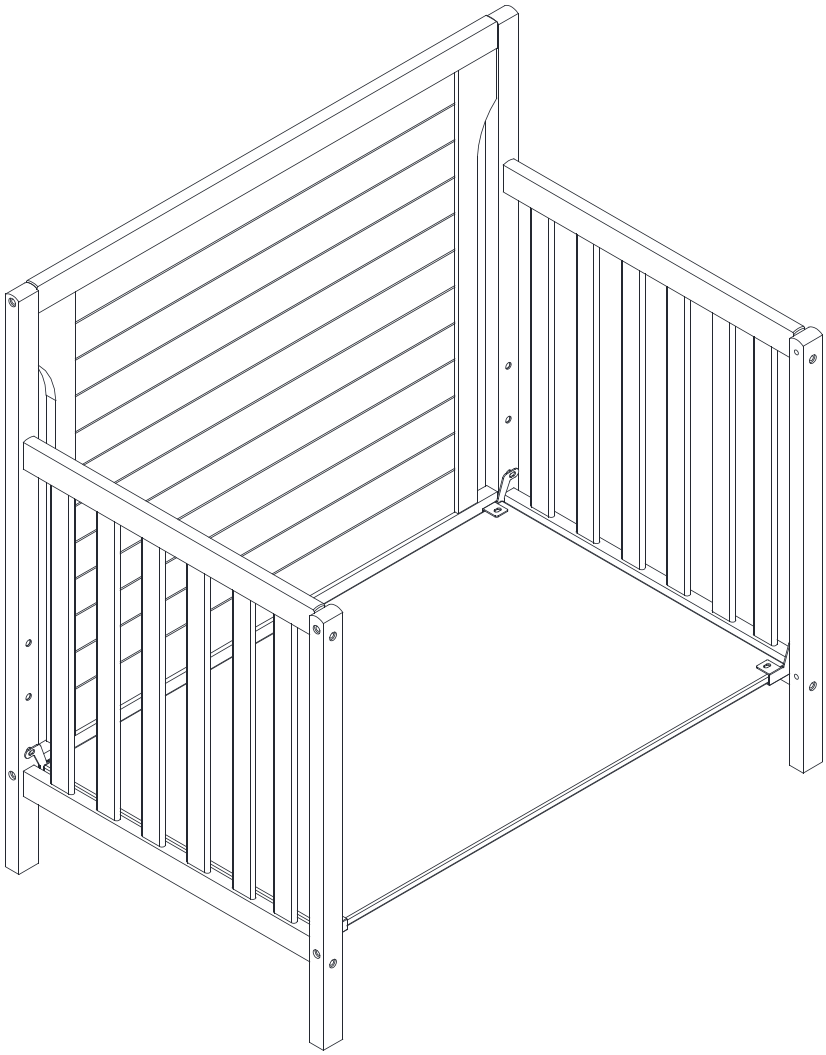

SECTION 3: Twin Bed Conversion
(Hollywood bed frame sold separately)

Parts and tools required to complete step.

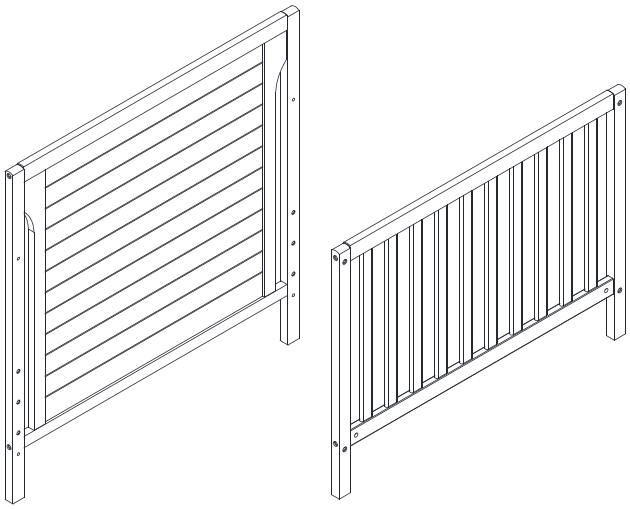

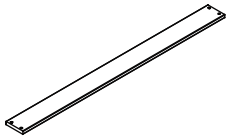

Cross Bar (4PCS)

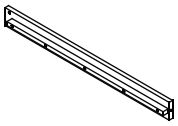

Side Bar (4PCS)

Split leg (2PCS)

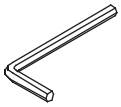

c:Allen wrench

Conversion kit is sold separately

You have the option to convert crib to a twin bed

1.Remove the right&left crib end, and leave the legs on the front&back rail, as the parts list shown.
2.Use the front rail as the footboard of twin bed.
3.Use the back rail as the headboard of twin bed.
4.Connect the front rail and the back rail to the kits (legs, long rails,and hardware) which are not included and sold separately.

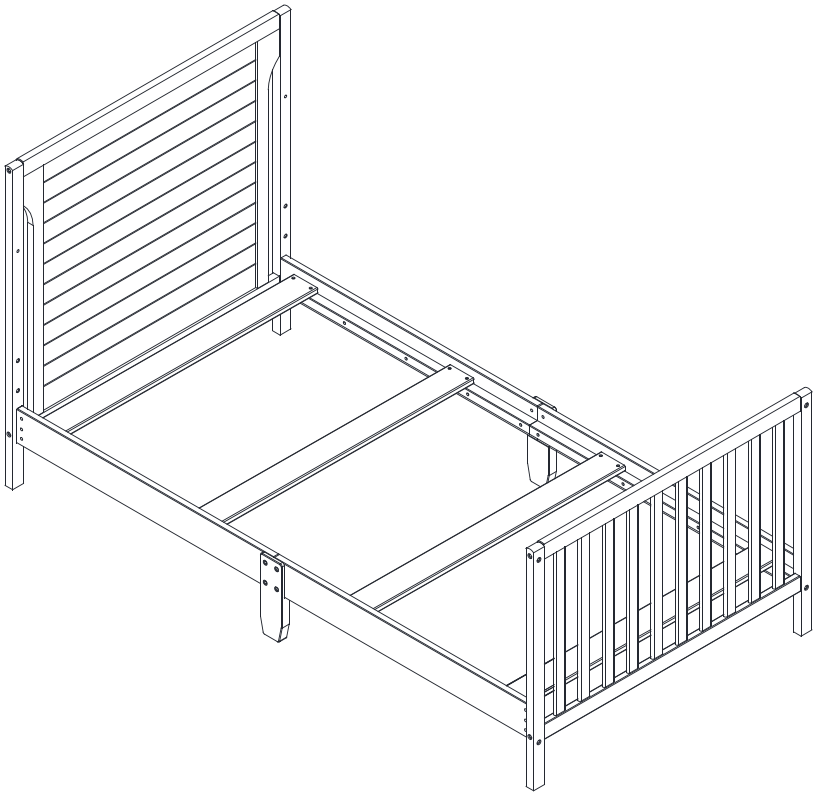

Kit de conversion vendu séparément.
Vous avez la possibilité de transformer le berceau en lit d'adulte.

1. Utilisez le rail avant comme pied de lit d'adulte;
2. Utilisez le rail arrière comme tête de lit d'adulte;
3. Connectez le rail avant et le rail arrière aux kits (pieds, rails longs et quincaillerie, vendus séparément).

SECTION 4: Converting crib to a twin Bed II (Hollywood bed frame sold separately)

Parts and tools required to complete step.

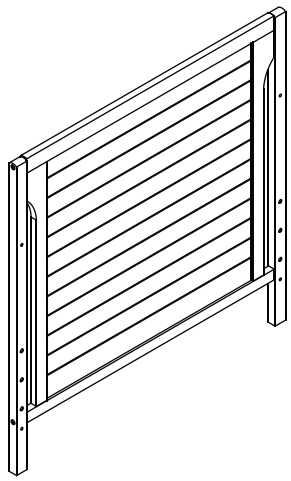

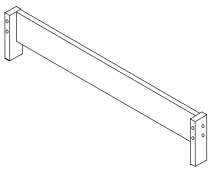

Not Supplied

Left Foot Platform Post (1pc)
Not Supplied

Right Foot Platform Post(1pc)
Not Supplied

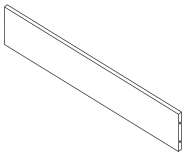

Rail Post(6pcs)
Not Supplied

Conversion kit is sold separately

You have the option to convert crib to a Twin Bed II.

1.Remove the front&back rail, and leave the legs on the left&right crib end, as the parts list shown.
2.Use the left crib end as the footboard of Twin Bed II.
3.Use the right crib end as the headboard of Twin Bed II.
4.Connect the left&right crib end to the kits (legs, long rails,and hardware) which are not included and sold separately.

Le Kit de conversion est fourni séparément

Vous avez la possibilité de convertir la crèche à un lit de taille complète

1.Utilisez le rail de la tête arrière du grand lit.
2.Connectez la plate-forme de pied gauche et la plate-forme de pied droit sur les rails qui ne sont pas inclus et vendu séparément.
3.Connectez les pièces assemblées et tête de lit de lit de taille pour les kits (jambes, longuesrails et le matériel) qui ne sont pas inclus et vendus séparément.

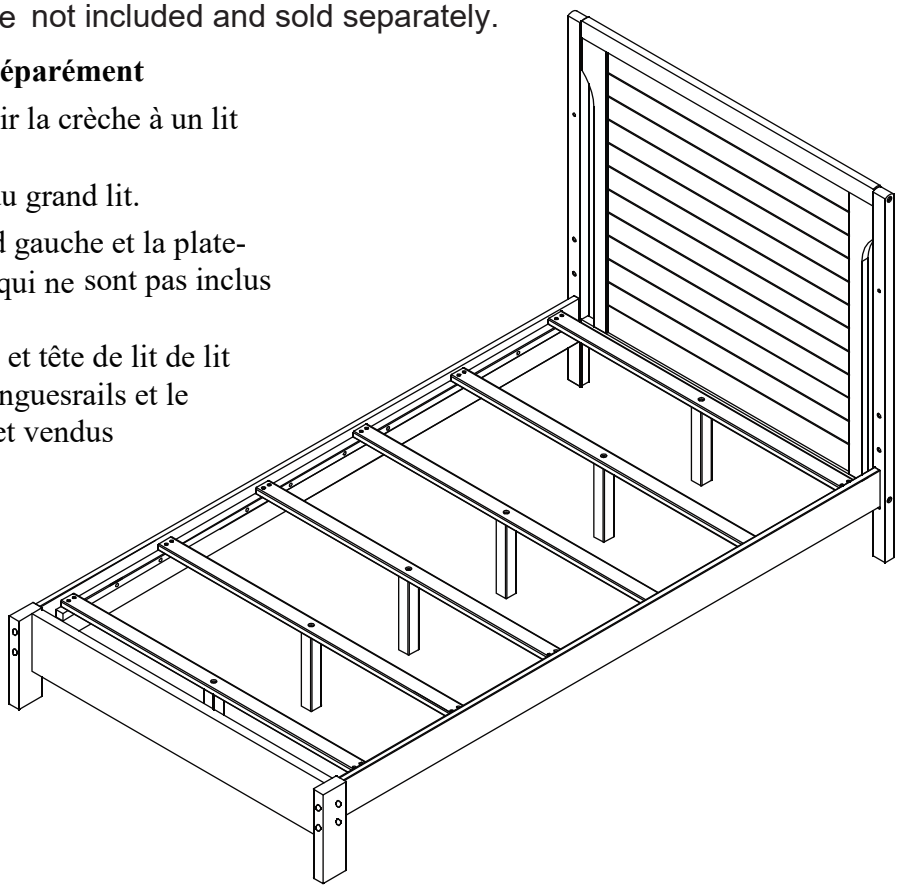

Model shown is example only.
Styles may vary .

Modèle présenté à titre indicatif.
Les styles peuvent varier.

LIMITED WARRANTY

- Dream on Me warrants its product to be free from defects in material and workmanship and agrees to remedy any such defect.
- This warranty covers 30 days from the date of original purchase.
- This warranty is valid only upon presentation of proof of purchase. This is solely limited to the repair or replacement of defective furniture components and no assembly labor is included.
- This warranty does not apply to any product which has been improperly assembled, subjected to misuse or abuse or which has been altered or repaired in any way.
- This warranty gives you specific legal rights and you may also have other rights which vary from State to State.

WARNING: Should this product become damaged, and/or components are broken or missing, DO NOT USE

To register your product for important safety alerts and updates to your product please visit www.dreamonme.com

Please do not return this item to the store before contacting us about missing parts or with any questions.

To report a problem, please log on to www.dreamonme.com and contact us by phone at 732-366-1788

In the event that you need to contact our customer service department please have the Style Number and MFG available. Use the space below to make note of those numbers. They can be found on the label on the Crib End bottom rail.

STYLE No: 637 [ ] COLOR [ ] FTY

Lot No:_____

Pack Date:_____

Date of Purchase:_____ (you should also keep your receipt)

1532, S. Washington Avenue
Piscataway, NJ 08854
E-mail: info@dreamonme.com
Customer Care: +1 (732) 366-1788

www.dreamonme.com

Follow us on

@dreamonmeinc @dreamonmeinc

to get your nursery featured on our social media.

Enter our monthly giveaway!

Simply scan the QRcode to register.

Chat with us!

For any questions or concerns or feedback.

DOM FAMILY

Dream On Me slumber baby sweetpea baby évolur evolving with your baby