Dream On Me Inc.
1532 S Washington Ave
Piscataway Township
NJ 08854
Email: info@dreamonme.com
www.dreamonme.com

STYLE NO: 681
PORTABLE CRIB
MFG DATE: JUL 2013
MFG CODE SY
MADE IN CHINA

CAUTION:ANY MATTRESS USED IN THIS CRIB MUST BE AT LEAST 23-5/8" (600MM) BY 37-3/4" (959MM) WITH A THICKNESS NOT EXCEEDING 2" (51MM) . THE CRIB CONFORMS TO APPLICABLE REGULATIONS PROMULGATED BY THE CONSUMER PRODUCTS SAFETY COMMISSION.

CONSUMER PRODUCT SAFETY COMMISSION
CERTIFIED
AN INDEPENDENT TESTING LABORATORY VALIDATES THE MANUFACTURER'S CERTIFICATION OF THIS CRIB TO ASTM F-406, CPSC 16 CFR 1220

STEP 1
Assemble latch (h & i) to the headboard(A & B) by using 5/8" screw (j&n).Then assemble plastic block(m) horizontal to the headboard (A&B) by using 3/4" screw (k).Tighten screws using a phillips-head screwdriver.Make sure that the latch on the bottom of each headboard (A&B) are locked.

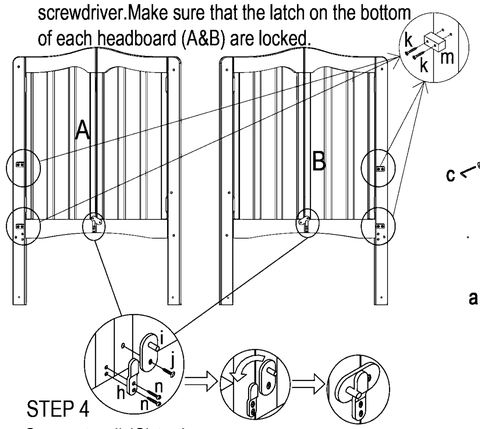

STEP 2
Connect rail (C) and stabilizer bar (D)to the headboard (A & B) by screws (a) and nuts (b) and wood dowel (d). DO NOT fully tighten the bolts.

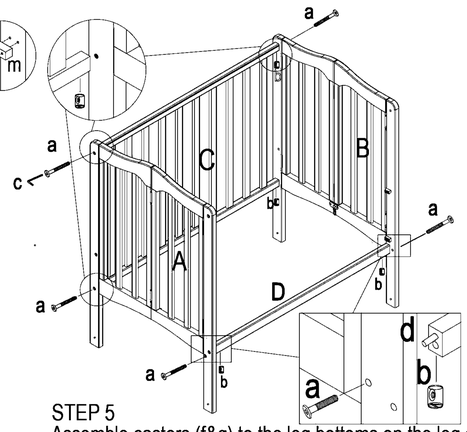

STEP 3
Attach the mattress board(E) to the headboard(A&B) by lock nuts (e).

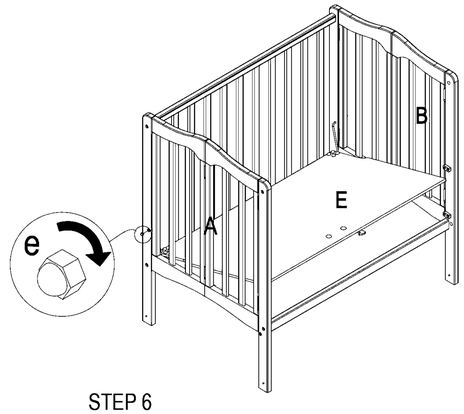

STEP 4
Connect rail (C) to the headboard (A & B) by screws (a) and nuts (b) . THEN FULLY tighten all the bolts .

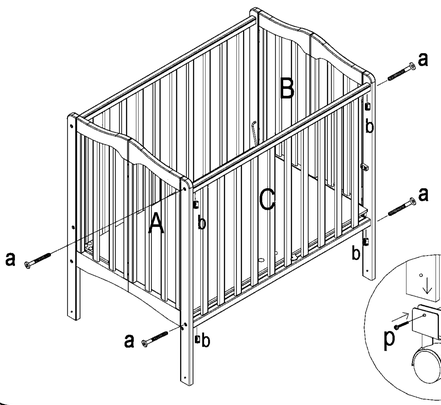

STEP 5
Assemble castors (f&g) to the leg bottoms on the leg on headboard (A&B) by using bolt (p) and nut (o). 2 castors (f) with brake are in the front. THEN add the mattress(F).

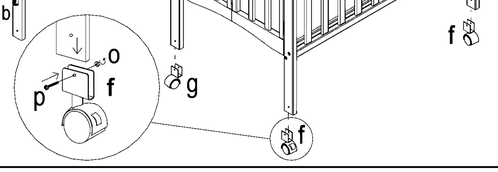

STEP 6
How to change the height of the mattress support?
1:Unlock and lift mattress board from the front;
2:Hold mattress board from bottom;
3:Let mattress board pivot forward from metal wire and laying down top level mattress support.

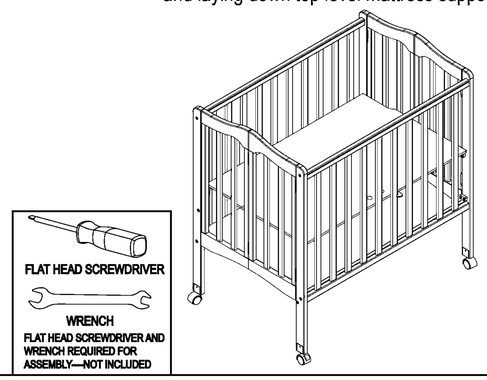

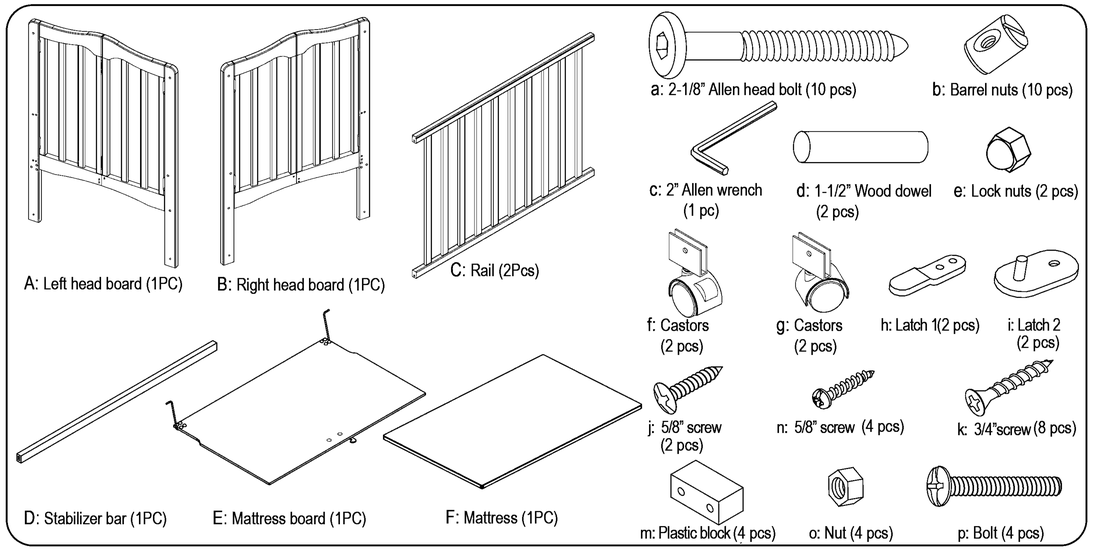

Follow bellow to fold the crib:
1.take out the mattress (F)
2.take out the mattress board (E)
3.unlock the latch on the headboard
4.fold the crib

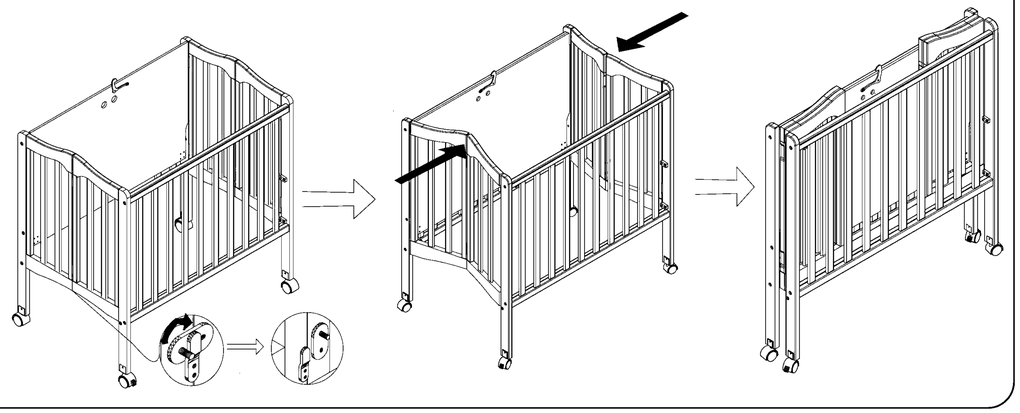

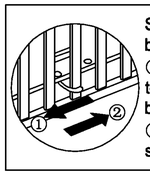

Secure the mattress board to front rail:
①.Push handle to left to release mattress board.
②.Snap handle to secure mattress board.

⚠ WARNING

****Keep instructions for further use****

- This product meets or exceeds specifications as issued by the consumer product safety for non-full size baby cribs.
- In gaps between a mattress too small or too thick and product sides.
- On soft bedding never add a mattress, pillow,comforter,or padding.

****Infants can suffocate****

- Use up and middle level mattress support only for a new born baby and not more than the first 3 months.
- Failure to follow these warnings and the instructions could result in serious injury or death.
- **Caution**: Before using this unit rechecks all screws to be sure they are tightened securely.
- A periodic check should be made of all screws & nuts to be sure they remain tight.
- Do not use plastic shipping bag or other plastic film as mattress covers not sold and intended for that purpose, which can cause suffocation.
- Never place product near window where cords from blinds or drapes which can cause strangulation.
- Strings can cause strangulation! Never place items with a string around a child's neck, such as hood strings or pacifier cords. Never suspend strings over product or attach strings to toys.
- Never use this product if there are any loose or missing fasteners, loose joints, broken parts, or torn mesh/fabric. Check before assembly and periodically during use. Contact DREAM ON ME. For replacement parts and instructional literature if needed.
- Never substitute parts, the product including side rails, must be fully erected prior to use. Make sure latches are secure. Replace teething rail if damaged or loose.
- Discontinue use of the product when child is able to climb out or reaches the height of 35 in.(890mm).
- When child is able to pull to standing position, set mattress/base to lowest adjustment position and DO NOT USE
- bumper pads, large toys and other objects in product which can be used as steps for climbing out.
  Never use a water mattress with this product, if refinishing use a non-toxic finish specified for children's products.
- To reduce the risk of SIDS, pediatricians recommend healthy infants be placed on their back to sleep, unless
- Otherwise advised by your physician.
  .Always provides the supervision for continued safety of your child.

MADE IN CHINA

LIMITED WARRANTY

- Dream on Me warrants its product to be free from defects in material and workmanship and agrees to remedy any such defect.
- This warranty covers 30 days from the date of original purchase.
- This warranty is valid only upon presentation of proof of purchase. This is solely limited to the repair or replacement of defective furniture components and no assembly labor is included.
- This warranty does not apply to any product which has been improperly assembled, subjected to misuse or abuse or which has been altered or repaired in any way.
- This warranty gives you specific legal rights and you may also have other rights which vary from State to State.

WARNING: Should this product become damaged, and/or components are broken or missing, DO NOT USE

WARNING:Plastic Block should be removed once the mattress support is used in the lowest level. Plastic Block should be kept in a secure places for future usages .

Dream On Me

1532, S. Washington Avenue
Piscataway, NJ 08854
E-mail: info@dreamonme.com

www.dreamonme.com

Follow us on
@dreamonmeinc @dreamonmeinc
to get your nursery featured on our social media.

Enter our monthly giveaway!
Simply scan the QRcode to register.

Chat with us!
For any questions or concerns or feedback.

DOM FAMILY

Dream On Me slumber baby sweetpea baby évolur evolving with your baby