Dream On Me Inc.
1532 S Washington Ave
Piscataway Township
NJ 08854
Email: info@dreamonme.com
www.dreamonme.com

STYLE NO:673
FULL SIZE FOLDING CRIB
MFG CODE BLY
MFG DATE: MAY 2013
MADE IN CHINA

CAUTION ANY MATTRESS USED IN THIS CRIB MUST BE AT LEAST 51-5/8" (1310MM) BY 27-1/4" (690MM) WITH A THICKNESS NOT EXCEEDING 6" (150MM). THE CRIB CONFORMS TO APPLICABLE REGULATIONS PROMULG ATED BY THE CONSUMER PRODUCTS SAFETY COMMISSION.

CONSUMER PRODUCT SAFETY COMMISSION
CERTIFIED
AN INDEPENDENT TESTING LABORATORY VALIDATES THE MANUFACTURER'S CERTIFICATION OF THIS FULL SIZE CRIB TO ASTM F-1169,CPSC 16 CFR 1219

STEP 1
Assemble latch (i & j) to the headboard (A & B) by using 5/8" screw (k).Then assemble plastic block(n) to the headboard (A& B) by using 3/4" screw (m).Tighten all by phillips-head screwdriver.
Make sure that the latch on the bottom of each headboard (A & B) are locked.

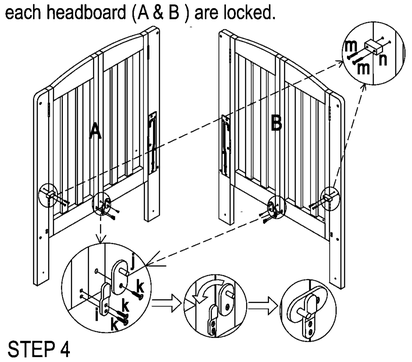

STEP 2
Connect rail (C) and stabilizer bar (D)to the headboard (A & B) by screws (a) and nuts (b) ,wood dowel (d) ,washer (g), washer (h). DO NOT fully tighten the bolts.

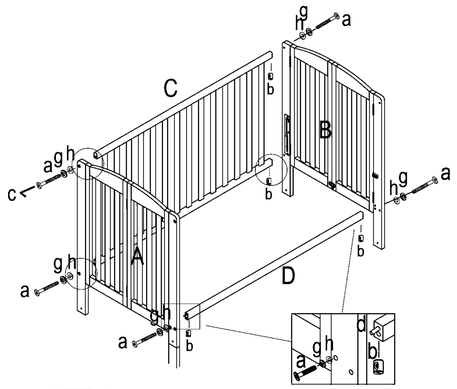

STEP 3
Slot in the metal pin into the notch of left and right headboard side corner post.then move up and down to adjust the mattress base into highest level.

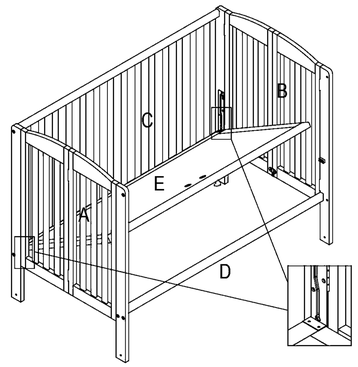

STEP 4
Connect rail (C) to the headboard (A & B) by screws (a) ,nuts (b),washer (g) and washer (h) .
THEN FULLY tighten all the bolts.

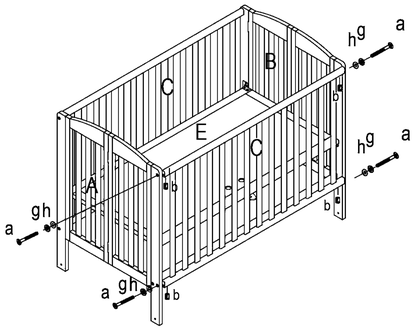

STEP 5
Assemble castors (e & f) to the leg bottoms on the leg on headboard (A&B).2 castors (e) with brake are in the front. THEN add the mattress(F).

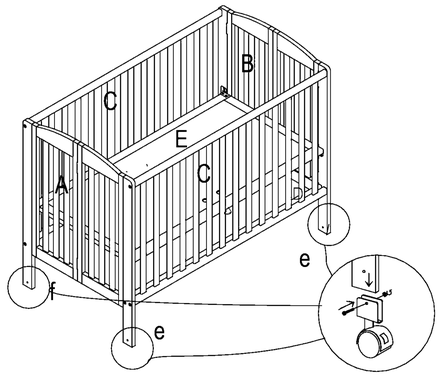

STEP 6
Select the desire level,and use both hand to lift up the mattress base,then adjust the level to your require height of the 2 level.

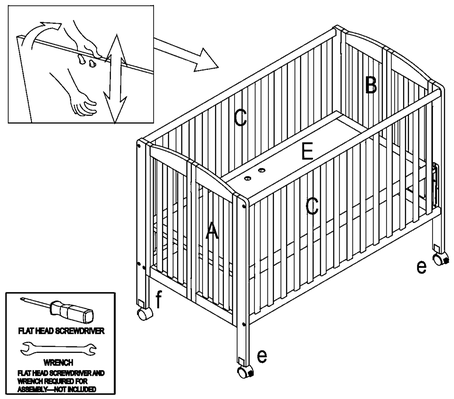

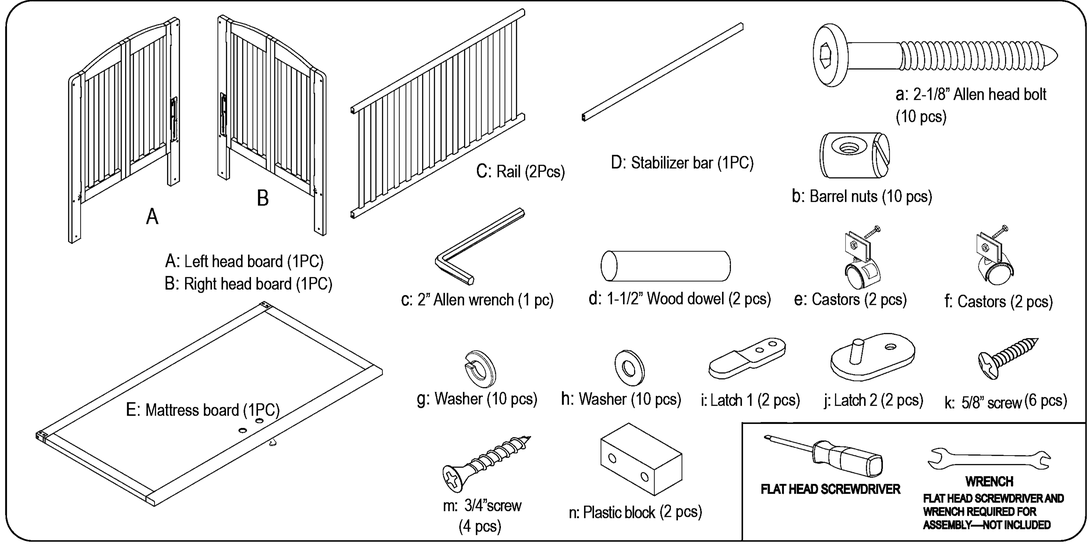

⚠ WARNING !

- Failure to follow these warnings and instructions could result in serious injury or death. Read all instructions before assembling,keep instructions for future use.Upon completion of assembling, make sure all screws, bolts and fastening devices have been securely tightened.
- Never use this product if there are any loose or missing fasteners, loose joints,broken parts, or torn mesh/fabric. check before assembly and periodically during use. Contact DREAM ON ME for replacement parts and instructional literature if needed.
- Never substitute parts, the product including side rails, must be fully erected prior to use.
- Discontinue use of the product when child is able to climb out or reaches the height of 35in (900mm).
- Never place product near window where cords from blinds or drapes can strangle a child.
- When child is able to pull to standing position,set mattress/base to lowest adjustment positionand remove bumper pads, large toys ,and other objects that could serve as steps for climbing out. A child can trap parts of the body or clothing on loose fasteners .
- Never use plastic shipping bag or other plastic things as mattress covers because they can cause suffocation.
- CAUTION: Any mattress used in this crib must be at least 27-1/4inches(690mm) by 51-5/8 inches(1310mm),with a thickness not exceeding 6 inches(150mm), the dimensions of the mattress shall be taken from seam to seam or edge to edge where appropriate.
- Never use a water mattress with this product.
- Strings can cause strangulation! Never place items with a string around a child's neck, such as hood strings or pacifier cords. Never suspend strings over product or attach strings to toys.
- Infants can suffocate in gaps between a mattress and crib side which is too small. On soft bedding never add a mattress, pillow or comforter.Never place additional padding under an infant.
- To reduce the risk of SIDS, pediatricians recommend healthy infants be placed on their back to sleep, unless otherwise advised by your physician.
- If refinishing,use a non-toxic finish specified for children's products.
- To help prevent strangulation, tighten all fasteners. A child can trap parts of the body or clothing on loose fasteners. Follow warnings on all products in a crib. See head panel & mattress support for instructions and warnings.
- Replace teething rail if damaged,cracked or loose.

MADE IN CHINA

Follow bellow to fold the crib:
1.take out the mattress (F)
2.take out the mattress board (E)
3 .unlock the latch on the headboard
4.fold the crib

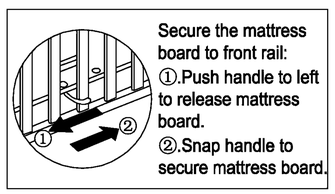

Secure the mattress board to front rail:
①.Push handle to left to release mattress board.
②.Snap handle to secure mattress board.

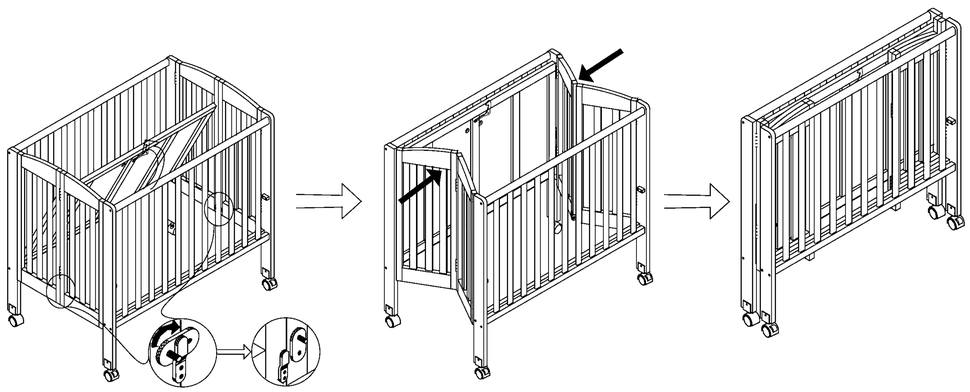

LIMITED WARRANTY

- Dream on Me warrants its product to be free from defects in material and workmanship and agrees to remedy any such defect.
- This warranty covers 30 days from the date of original purchase.
- This warranty is valid only upon presentation of proof of purchase. This is solely limited to the repair or replacement of defective furniture components and no assembly labor is included.
- This warranty does not apply to any product which has been improperly assembled, subjected to misuse or abuse or which has been altered or repaired in any way.
- This warranty gives you specific legal rights and you may also have other rights which vary from State to State.

WARNING: Should this product become damaged, and/or components are broken or missing, DO NOT USE

WARNING:Plastic Block should be removed once the mattress support is used in the lowest level. Plastic Block should be kept in a secure places for future usages .

Dream On Me

1532, S. Washington Avenue
Piscataway, NJ 08854
E-mail: info@dreamonme.com

www.dreamonme.com

Follow us on
@dreamonmeinc @dreamonmeinc
to get your nursery featured on our social media.

Enter our monthly giveaway!
Simply scan the QRcode to register.

Chat with us!
For any questions or concerns or feedback.

DOM FAMILY

Dream On Me slumber baby sweetpea baby évolur evolving with your baby